Planetary Gearbox PLG52M

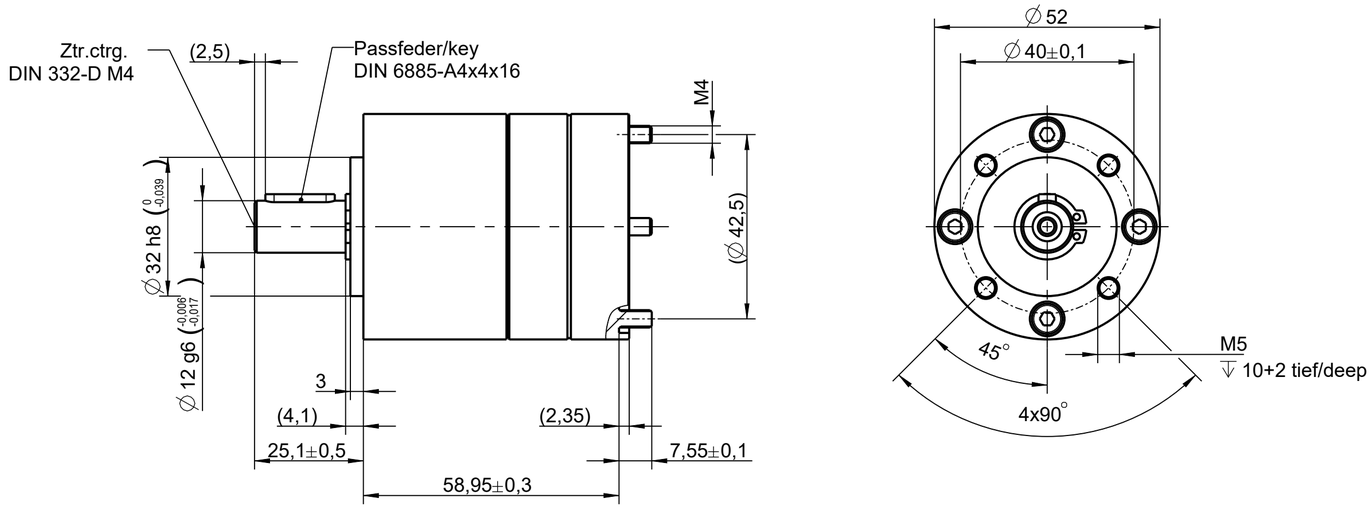

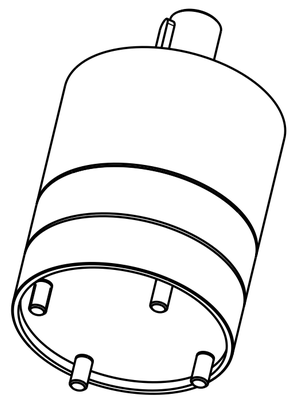

ALL rights reserved / Alle Rechte Vorbehalten