Planetary Gearbox PLG52M

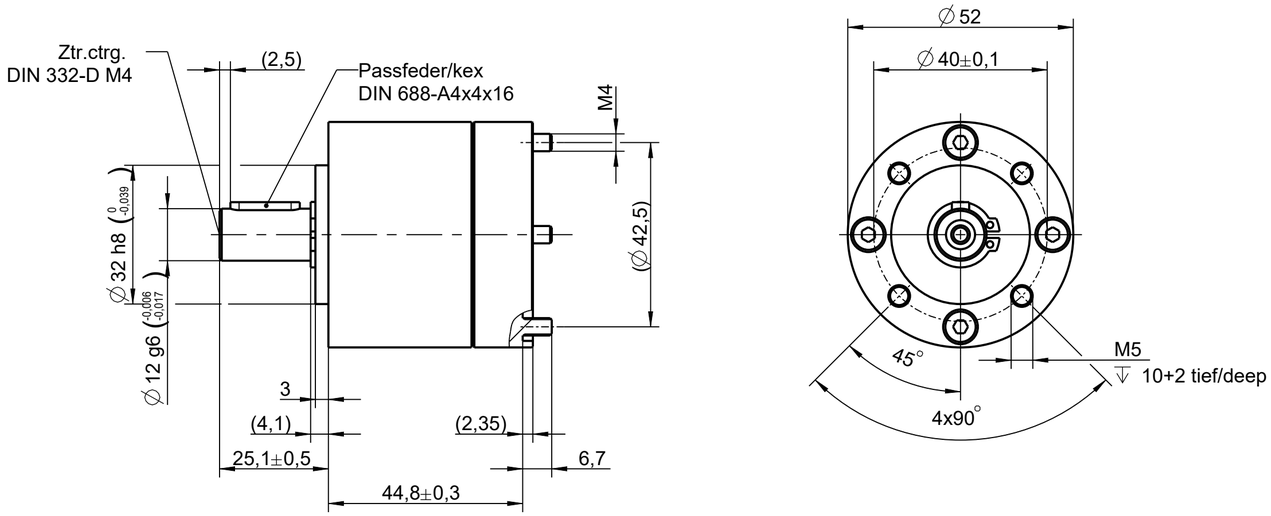


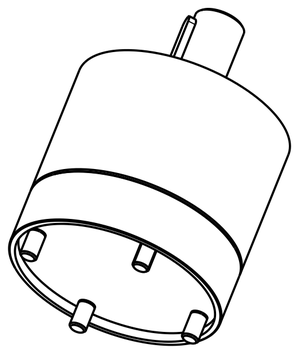

ALL rights reserved / Alle Rechte Vorbehalten